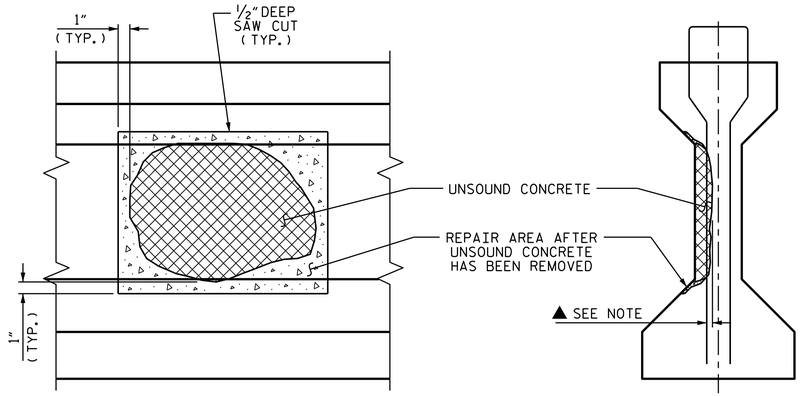

ELEVATION SECTION

GIRDER WEB REPAIR

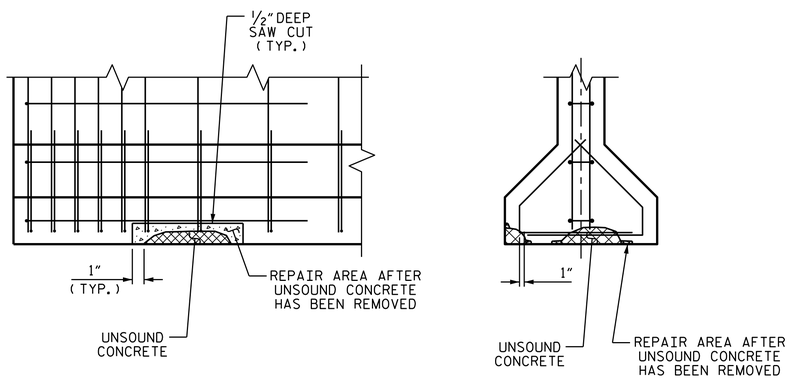

ELEVATION SECTION

GIRDER FLANGE REPAIR

GIRDER REPAIR QUANTITIES

	QUANTITIES				
	ESTIMATE		ACTUAL		
	AREA SF	VOLUME CF	AREA SF	DEPTH FT	VOLUME CF
SPAN A	3.1	1.0			
SPAN B	10.9	3.6			
SPAN C	7.8	2.6			
SPAN D	8.2	2.7			
SPAN E	9.0	3.0			
SPAN F	8.6	2.9			
TOTAL	47.6	15.8			

VALUES IN CHART REPRESENT ESTIMATED REPAIR TOTALS AFTER REMOVAL OF UNSOUND CONCRETE, MIN. OF 1" BEHIND REBAR AND MIN. 2" CL TO SAWCUT. FOR GIRDER REPAIR AREAS, SEE "PRESTRESSED GIRDER REPAIR" SHEETS.

EPOXY COATING ENDS OF GIRDER QUANTITIES

SPAN	AREA SF
SPAN A	109.6
SPAN B	109.6
SPAN C	109.6
SPAN D	109.6
SPAN E	109.6
SPAN F	109.6
TOTAL	657.6

NOTES

FOR REPAIRS TO PRESTRESSED CONCRETE GIRDERS, SEE SPECIAL PROVISIONS.

▲ ALL UNSOUND CONCRETE MUST BE REMOVED, HOWEVER, PRESTRESSED STRANDS SHOULD NOT BE DISTURBED UNLESS ABSOLUTELY NECESSARY. USE EXTREME CARE TO NOT DAMAGE STRANDS.

PROJ. NO. 15BPR.3

RANDOLPH COUNTY

BRIDGE NO. 191

NORTH CAROLINA PROFESSIONAL SEAL 031583 ENGINEER KRISHNA PRASAD SEAL

DocuSigned by: Krishna P. Seal
EA6F794150EF497...
9/29/2017

STATE OF NORTH CAROLINA
DEPARTMENT OF TRANSPORTATION
RALEIGH

PRESTRESSED GIRDER REPAIR DETAILS AND SUMMARY

REVISIONS						SHEET NO.
NO.	BY:	DATE:	NO.	BY:	DATE:	S-15
1			3			TOTAL SHEETS
2			4			28

DOCUMENT NOT CONSIDERED FINAL UNLESS ALL SIGNATURES COMPLETED

DRAWN BY : H. T. BARBOUR DATE : 6-27-17
CHECKED BY : E. K. POPE DATE : 8-17-17

29-SEP-2017 12:45
R:\Structures\750191\finalplans\Microstation\401_029_15BPR.3_SMU_ G4_15_750191.dgn
tbarbour