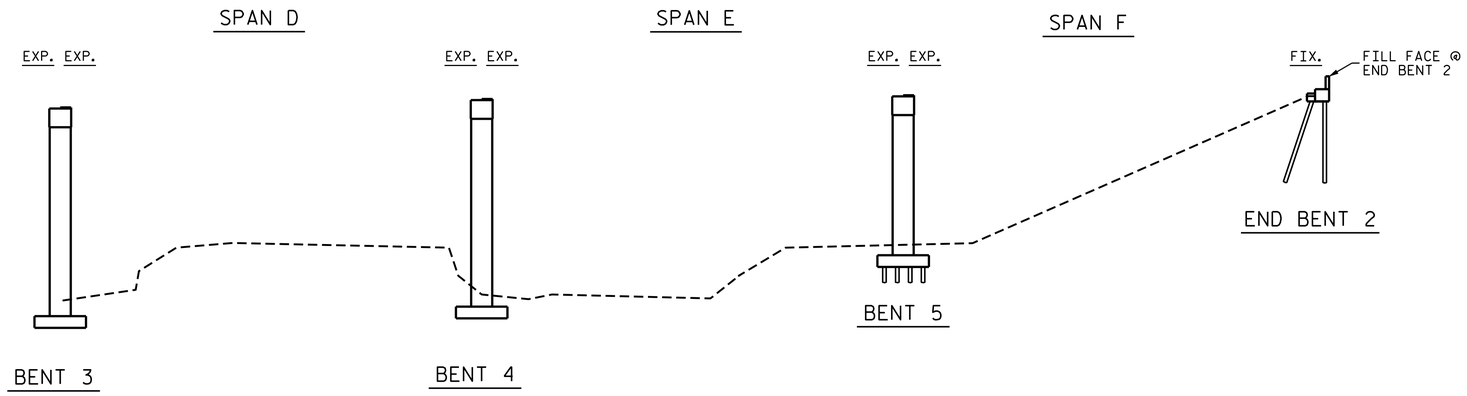

SECTION ALONG ℄ BRIDGE

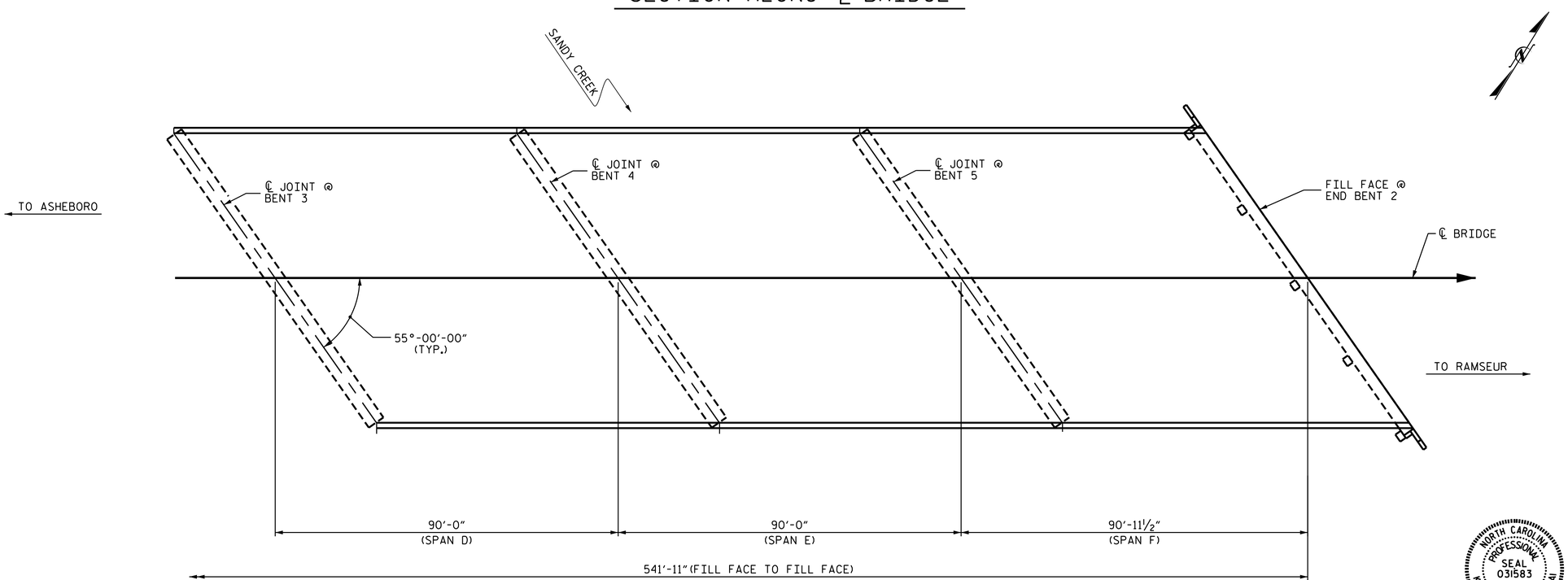

PLAN

PROJECT NO. 15BPR.3

RANDOLPH COUNTY

BRIDGE NO. 191

SHEET 2 OF 3

NORTH CAROLINA PROFESSIONAL SEAL 031583 ENGINEER KRISHNA PRASAD SEDAI

DocuSigned by: Krishna P. Sedai
EA8F794150D74B7...
9/29/2017

STATE OF NORTH CAROLINA
DEPARTMENT OF TRANSPORTATION
RALEIGH

GENERAL DRAWING

FOR BRIDGE OVER DEEP RIVER AND SANDY CREEK ON US 64 BETWEEN ASHEBORO AND RAMSEUR

REVISIONS						SHEET NO.
NO.	BY:	DATE:	NO.	BY:	DATE:	S-2
1			3			TOTAL SHEETS
2			4			28

DOCUMENT NOT CONSIDERED FINAL UNLESS ALL SIGNATURES COMPLETED

DRAWN BY : H. T. BARBOUR DATE : 6-16-17
CHECKED BY : E. K. POPE DATE : 7-12-17

29-SEP-2017 12:45
R:\Structures\750191\finalplans\Microstation\401_003_15BPR.3_SMU_ GD_02_750191.dgn
tbarbour