NOTES

TYPICAL BENT CAP REPAIRS ARE SHOWN. REPAIR DETAILS SIMILAR FOR END BENT CAPS AND STRUTS.

THE EXISTING REINFORCING STEEL IN THE PEDESTAL WALL SHALL BE CLEANED. STRAIGHTENED AND REMAIN IN PLACE.

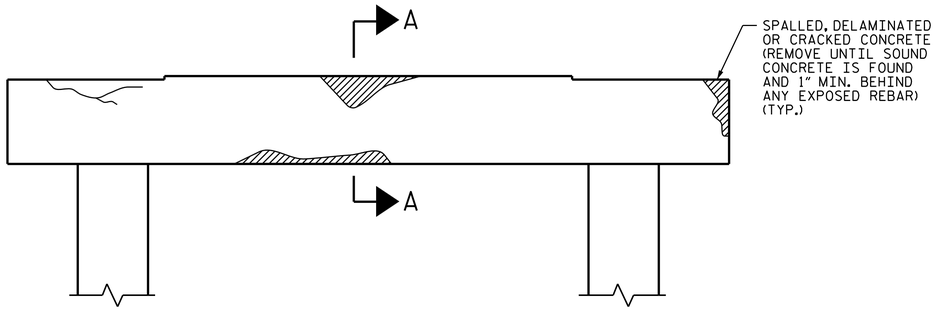

BENT CAP REPAIRS

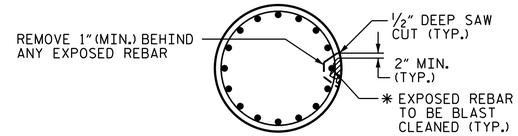

PLAN OF COLUMN

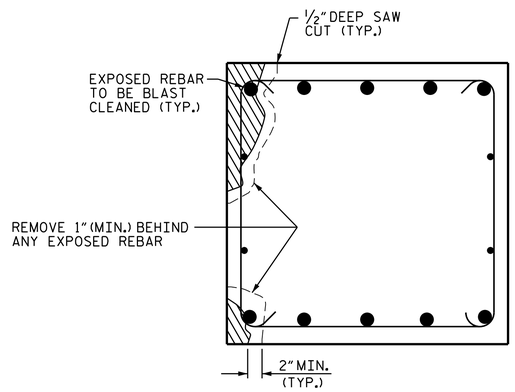

SECTION A-A

CAP REPAIR

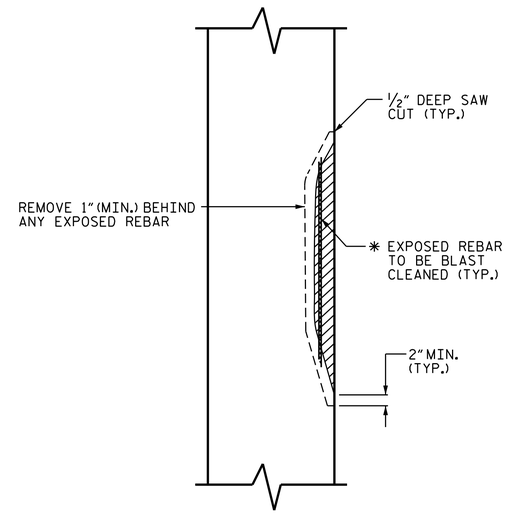

* REPAIR LENGTH SHALL NOT EXCEED 10 FEET.

ELEVATION OF COLUMN

COLUMN REPAIR

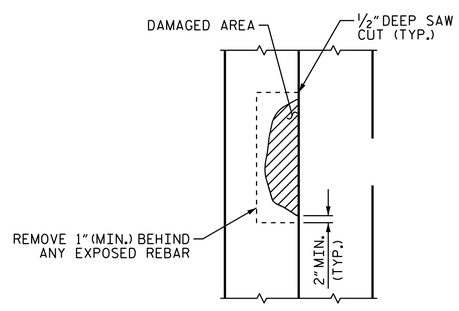

PLAN

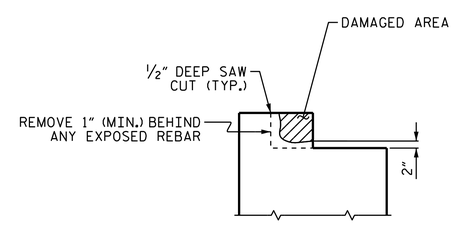

ELEVATION

PEDESTAL WALL REPAIR

PROJ. NO. 15BPR.3

RANDOLPH COUNTY

BRIDGE NO. 191

STATE OF NORTH CAROLINA
DEPARTMENT OF TRANSPORTATION
RALEIGH

TYPICAL CAP AND COLUMN REPAIR DETAILS

NORTH CAROLINA PROFESSIONAL SEAL 031583 ENGINEER KRISHNA PRASAD SEDAI

DocuSigned by: Krishna P. Sedai
EA6F79415DF1450
9/29/2017

DOCUMENT NOT CONSIDERED FINAL UNLESS ALL SIGNATURES COMPLETED

REVISIONS								SHEET NO.
NO.	BY:	DATE:	NO.	BY:	DATE:			S-28
1			3					TOTAL SHEETS
2			4					28

DRAWN BY : H. T. BARBOUR DATE : 8-22-17
CHECKED BY : K. P. SEDAI DATE : 8-17

29-SEP-2017 12:46
R:\Structures\750191\finalplans\Microstation\401_055_15BPR.3_SMU_ CCR_28_750191.dgn