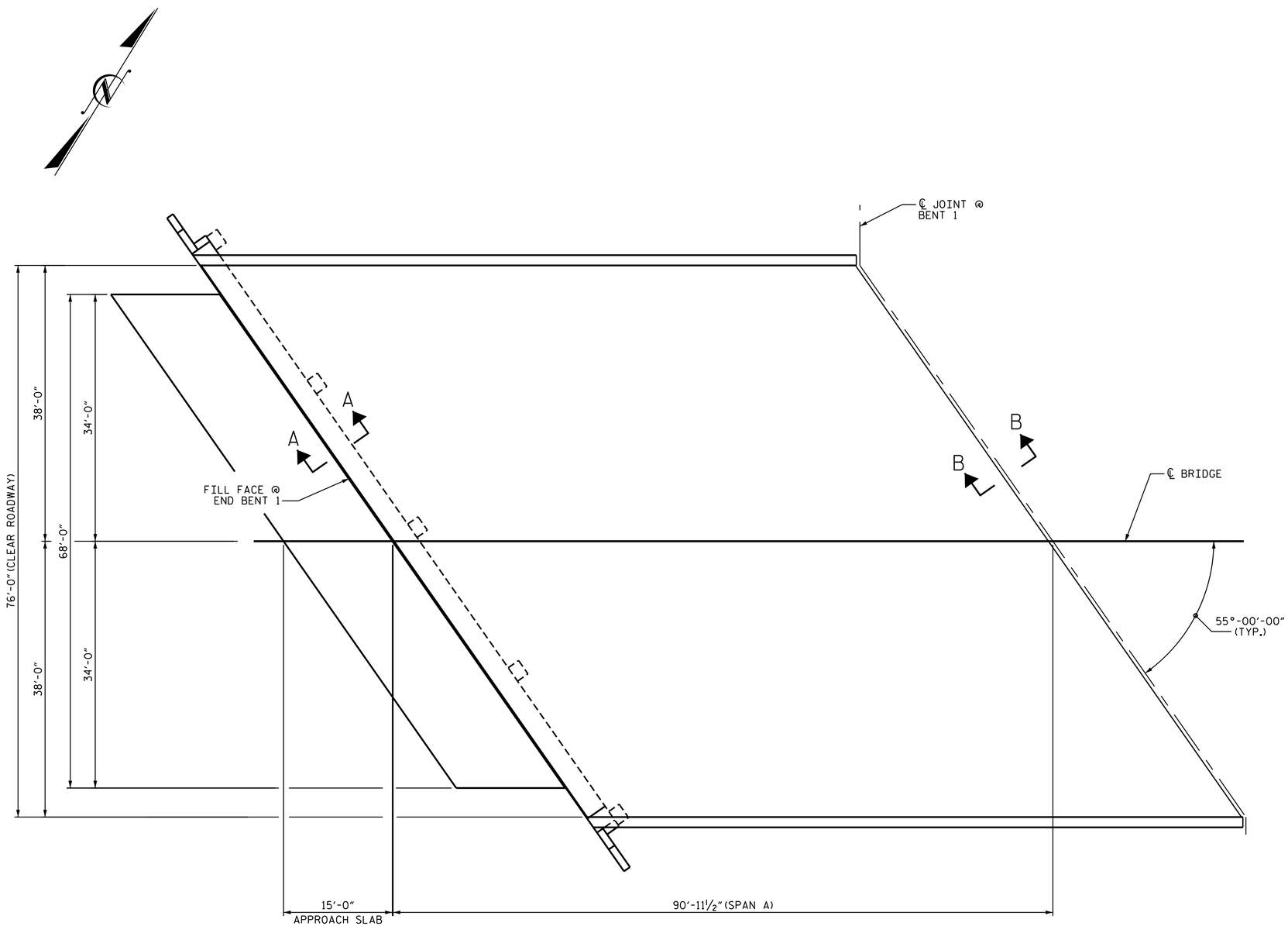

PLAN

AS-BUILT REPAIR QUANTITY TABLE

TOP OF DECK REPAIRS

	ESTIMATE	ACTUAL
SCARIFYING BRIDGE DECK	881 SQ. YDS.	
CLASS II SURFACE PREPARATION	0.0 SQ. YDS.	
CONCRETE DECK REPAIR FOR PPC OVERLAY	0.0 SQ. YDS.	
SHOTBLASTING BRIDGE DECK	881 SQ. YDS.	
PPC MATERIALS	30.6 CU. YDS.	
PLACING AND FINISHING PPC OVERLAY	881 SQ. YDS.	
GROOVING BRIDGE FLOORS	7468 SQ. FT.	

UNDERSIDE OF DECK REPAIRS

SHOTCRETE REPAIRS	ESTIMATE		ACTUAL	
	AREA SQ. FT.	VOLUME CU. FT.	AREA SQ. FT.	VOLUME CU. FT.
UNDERSIDE OF DECK	0.0	0.0		
UNDERSIDE OF OVERHANG	0.0	0.0		

	ESTIMATE	ACTUAL
UNDERSIDE EPOXY RESIN INJECTION	0.0 LIN. FT.	
UNDERSIDE EPOXY COATING	0.0 LIN. FT.	

TOP OF DECK REPAIR QUANTITIES REPRESENT ESTIMATED VALUES OF CLASS II SURFACE PREPARATION AND CONCRETE DECK REPAIR FOR PPC OVERLAY AFTER REMOVAL OF UNSOUND CONCRETE. (MIN. 2" CLEAR TO SAWCUT). SEE OVERLAY SURFACE PREPARATION FOR POLYESTER POLYMER CONCRETE SPECIAL PROVISION.

UNDERSIDE OF DECK REPAIR QUANTITIES REPRESENT ESTIMATED VALUES OF DECK REPAIR TOTALS AFTER REMOVAL OF UNSOUND CONCRETE, MINIMUM OF 1" BEHIND REBAR AND MINIMUM OF 2" CLEAR TO SAWCUT. SEE REPAIR DETAILS.

NOTES:

REPAIR LOCATIONS AND ESTIMATED QUANTITIES ARE BASED ON THE BEST INFORMATION AVAILABLE. IF ADDITIONAL REPAIRS NOT SHOWN ON THE DRAWINGS ARE DEEMED NECESSARY BY THE ENGINEER, THE ENGINEER WILL NOTE ON THE DRAWINGS THE APPROXIMATE LOCATIONS AND DESCRIPTION OF THE REPAIRS AND ENTER THE ACTUAL QUANTITIES INTO THE AS-BUILT REPAIR QUANTITY TABLE.

FOR SECTION A-A, SEE "JOINT DETAILS" SHEET.

FOR SECTION B-B, SEE "JOINT DETAILS" SHEET.

FOR UNDERSIDE OF DECK AND DIAPHRAGM REPAIRS, SEE "OVERHANG, DIAPHRAGM AND BRIDGE RAIL REPAIR DETAILS" SHEET.

APPROX. CLASS II SURFACE PREPARATION

UNDERSIDE EPOXY COATING

UNDERSIDE REPAIR

PROJECT NO. 15BPR.3

RANDOLPH COUNTY

BRIDGE NO. 191

SHEET 1 OF 6

NORTH CAROLINA PROFESSIONAL SEAL 031583 ENGINEER KRISHNA PRASAD SEDAI

DocuSigned by: Krishna P. Sedai
EA8F79415008F4BD
9/29/2017

STATE OF NORTH CAROLINA
DEPARTMENT OF TRANSPORTATION
RALEIGH

PLAN OF SPAN A

REVISIONS						SHEET NO.
NO.	BY:	DATE:	NO.	BY:	DATE:	S-5
1			3			TOTAL SHEETS
2			4			28

DOCUMENT NOT CONSIDERED FINAL UNLESS ALL SIGNATURES COMPLETED

DRAWN BY : H. T. BARBOUR DATE : 6-19-17
CHECKED BY : E. K. POPE DATE : 7-17-17

29-SEP-2017 12:45
R:\Structures\750191\finalplans\Microstation\401_009_15BPR.3_SMU_ S1_05_750191.dgn
tbarbour