NOTES

FOR FOAM JOINT SEALS, SEE SPECIAL PROVISIONS.

THE INSTALLED FOAM JOINT SEALS SHALL BE WATERTIGHT.

NOMINAL UNCOMPRESSED SEAL WIDTH OF FOAM JOINT SEAL SHALL BE 2".

THE CONTRACTOR WILL NOT BE PERMITTED TO FORM THE JOINT FOR THE FOAM JOINT SEAL IN LIEU OF SAWING THE JOINT.

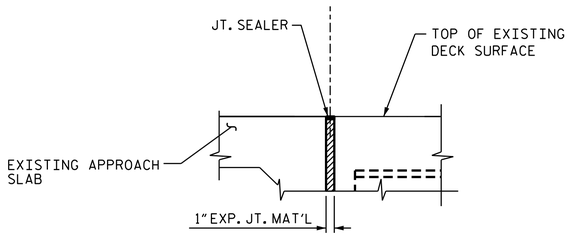

EXISTING JOINT

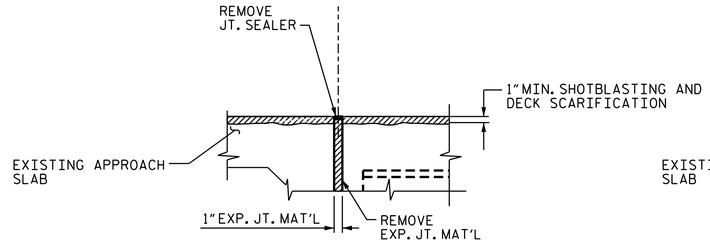

MINIMUM EXISTING JOINT DEMOLITION

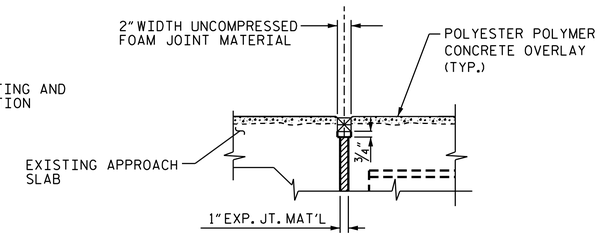

PROPOSED JOINT PRE-SAWED

SECTION A-A
JOINT INSTALLATION SEQUENCE
AT END BENTS

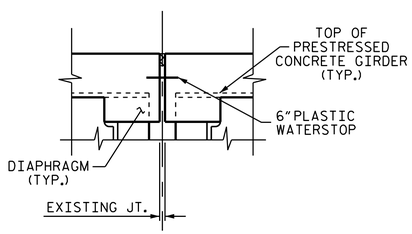

EXISTING JOINT

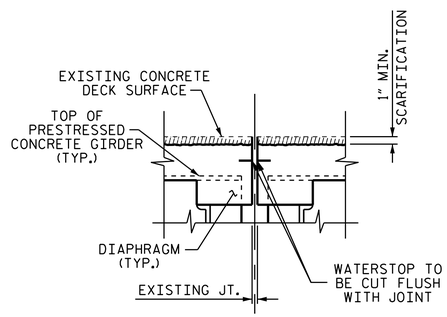

EXISTING JOINT AFTER DECK SCARIFICATION

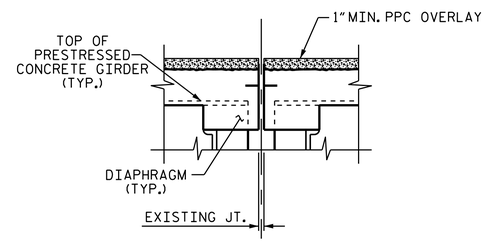

PROPOSED JOINT PRE-SAWED

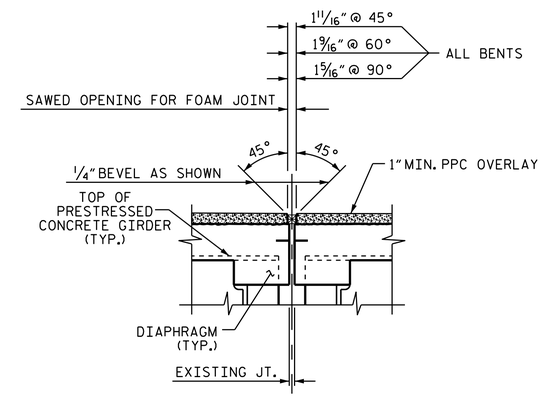

PROPOSED FOAM JOINT SEAL

SECTION B-B
JOINT INSTALLATION SEQUENCE
AT BENTS

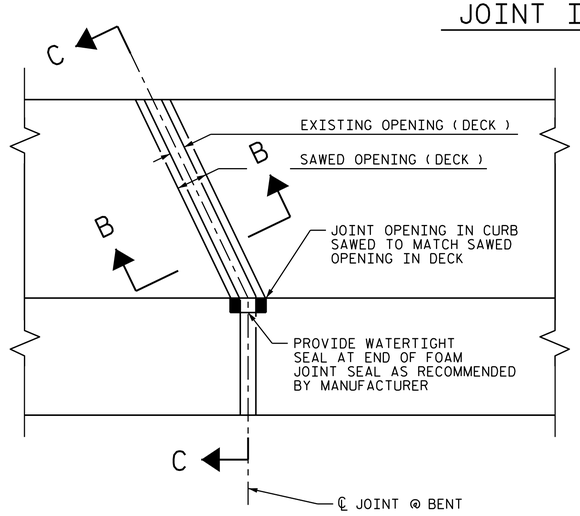

PLAN

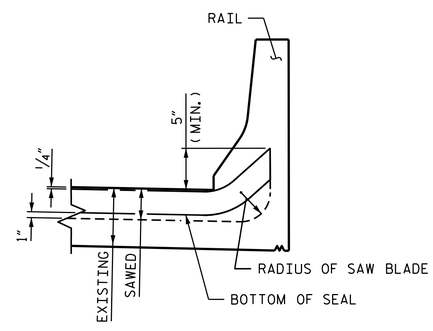

SECTION C-C

PROJECT NO. 15BPR.3
RANDOLPH COUNTY
BRIDGE NO. 191

STATE OF NORTH CAROLINA
DEPARTMENT OF TRANSPORTATION
RALEIGH

JOINT DETAILS

NORTH CAROLINA PROFESSIONAL SEAL 031583 ENGINEER KRISHNA PRASAD SEAL
DocuSigned by: Krishna P. 9/29/2017
EA6F79415D6F4D0...

DOCUMENT NOT CONSIDERED FINAL UNLESS ALL SIGNATURES COMPLETED

REVISIONS								SHEET NO.
NO.	BY:	DATE:	NO.	BY:	DATE:			S-11
1			3					TOTAL SHEETS
2			4					28

DRAWN BY : H. T. BARBOUR DATE : 7-19-17
CHECKED BY : E. K. POPE DATE : 8-17-17

29-SEP-2017 12:45
R:\Structures\750191\finalplans\Microstation\401_021_15BPR.3_SMU_JT_11_750191.dgn