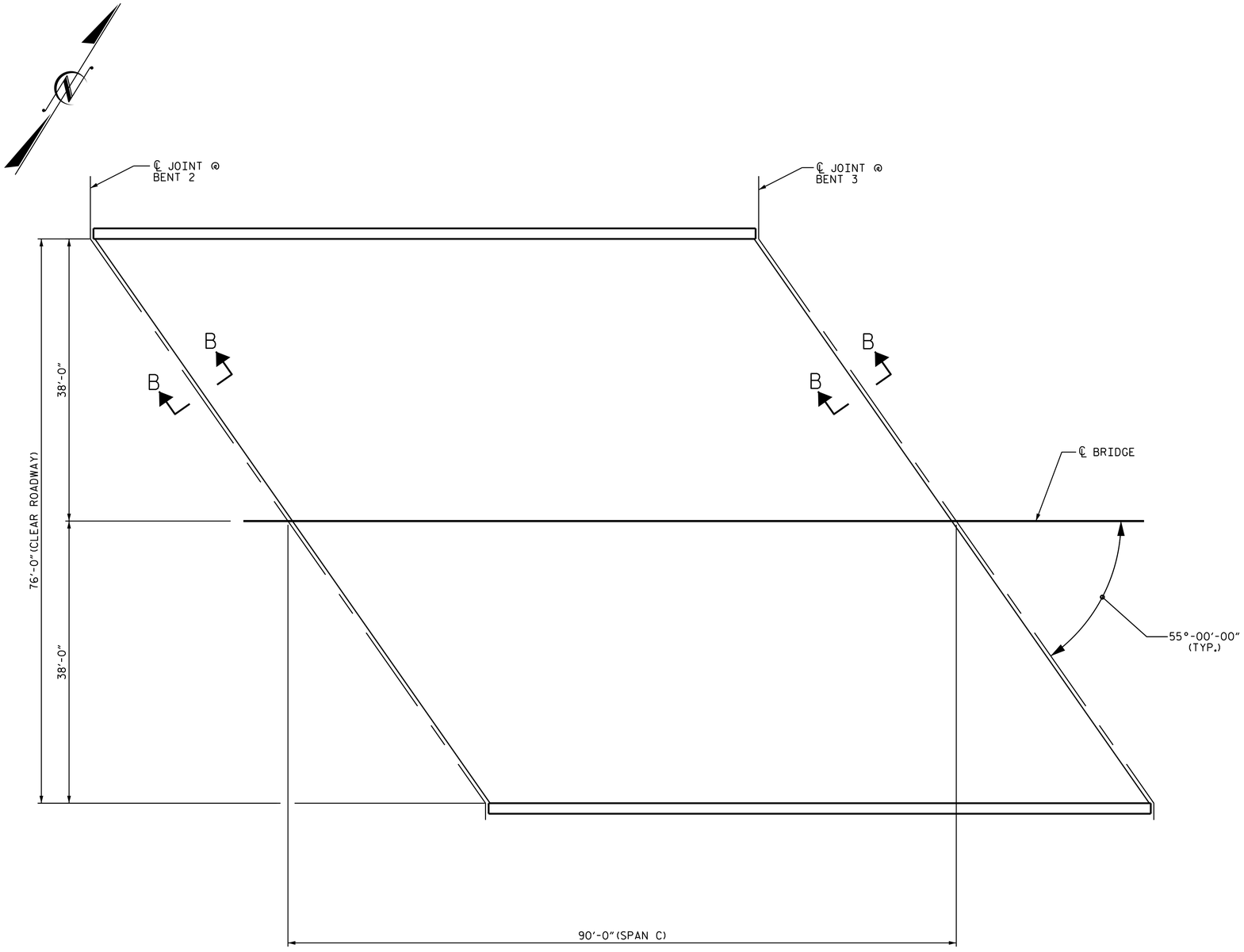

PLAN

AS-BUILT REPAIR QUANTITY TABLE

TOP OF DECK REPAIRS

	ESTIMATE	ACTUAL
SCARIFYING BRIDGE DECK	760 SQ. YDS.	
CLASS II SURFACE PREPARATION	0.0 SQ. YDS.	
CONCRETE DECK REPAIR FOR PPC OVERLAY	0.0 SQ. YDS.	
SHOTBLASTING BRIDGE DECK	760 SQ. YDS.	
PPC MATERIALS	26.4 CU. YDS.	
PLACING AND FINISHING PPC OVERLAY	760 SQ. YDS.	
GROOVING BRIDGE FLOORS	6533 SQ. FT.	

UNDERSIDE OF DECK REPAIRS

SHOTCRETE REPAIRS	ESTIMATE		ACTUAL	
	AREA SQ. FT.	VOLUME CU. FT.	AREA SQ. FT.	VOLUME CU. FT.
UNDERSIDE OF DECK	0.0	0.0		
UNDERSIDE OF OVERHANG	0.0	0.0		
	ESTIMATE		ACTUAL	
UNDERSIDE EPOXY RESIN INJECTION	0.0 LIN. FT.			
UNDERSIDE EPOXY COATING	0.0 LIN. FT.			

TOP OF DECK REPAIR QUANTITIES REPRESENT ESTIMATED VALUES OF CLASS II SURFACE PREPARATION AND CONCRETE DECK REPAIR FOR PPC OVERLAY AFTER REMOVAL OF UNSOUND CONCRETE. (MIN. 2" CLEAR TO SAWCUT). SEE OVERLAY SURFACE PREPARATION FOR POLYESTER POLYMER CONCRETE SPECIAL PROVISION.

UNDERSIDE OF DECK REPAIR QUANTITIES REPRESENT ESTIMATED VALUES OF DECK REPAIR TOTALS AFTER REMOVAL OF UNSOUND CONCRETE, MINIMUM OF 1" BEHIND REBAR AND MINIMUM OF 2" CLEAR TO SAWCUT. SEE REPAIR DETAILS.

NOTES:

REPAIR LOCATIONS AND ESTIMATED QUANTITIES ARE BASED ON THE BEST INFORMATION AVAILABLE. IF ADDITIONAL REPAIRS NOT SHOWN ON THE DRAWINGS ARE DEEMED NECESSARY BY THE ENGINEER, THE ENGINEER WILL NOTE ON THE DRAWINGS THE APPROXIMATE LOCATIONS AND DESCRIPTION OF THE REPAIRS AND ENTER THE ACTUAL QUANTITIES INTO THE AS-BUILT REPAIR QUANTITY TABLE.

FOR SECTION B-B, SEE "JOINT DETAILS" SHEET.

FOR UNDERSIDE OF DECK AND DIAPHRAGM REPAIRS, SEE "OVERHANG, DIAPHRAGM AND BRIDGE RAIL REPAIR DETAILS" SHEET.

PROJECT NO. 15BPR.3

RANDOLPH COUNTY

BRIDGE NO. 191

SHEET 3 OF 6

APPROX. CLASS II SURFACE PREPARATION

UNDERSIDE EPOXY COATING

UNDERSIDE REPAIR

NORTH CAROLINA PROFESSIONAL SEAL 031583 ENGINEER KRISHNA PRASAD SEDIMI

DocuSigned by: Krishna P. EA6F79415DF49D 9/29/2017

STATE OF NORTH CAROLINA
DEPARTMENT OF TRANSPORTATION
RALEIGH

PLAN OF SPAN C

DRAWN BY : H. T. BARBOUR DATE : 6-19-17
CHECKED BY : E. K. POPE DATE : 7-17-17

DOCUMENT NOT CONSIDERED FINAL UNLESS ALL SIGNATURES COMPLETED

REVISIONS							SHEET NO.
NO.	BY:	DATE:	NO.	BY:	DATE:		S-7
1			3				TOTAL SHEETS
2			4				28

29-SEP-2017 12:45
R:\Structures\750191\finalplans\Microstation\401_013_15BPR.3_SMU_ S3_07_750191.dgn
tbarbour