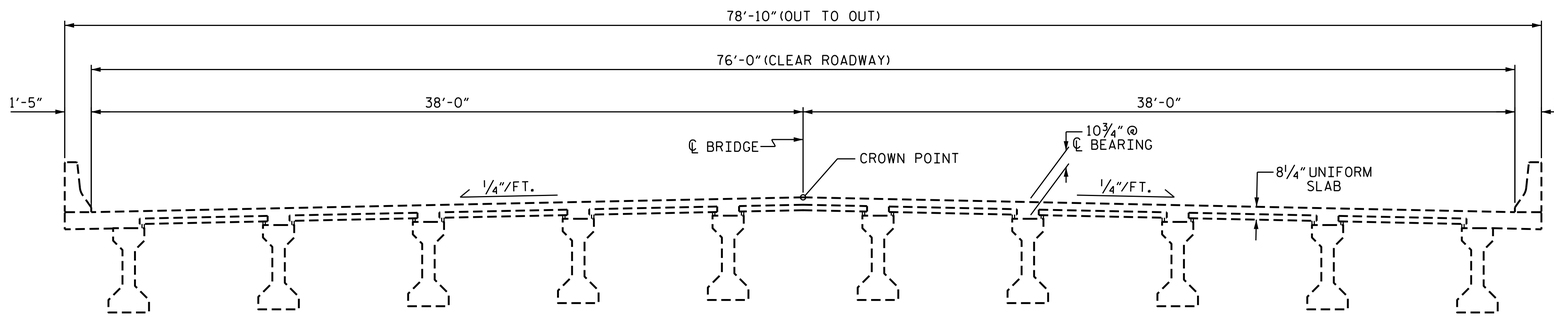

EXISTING TYPICAL SECTION

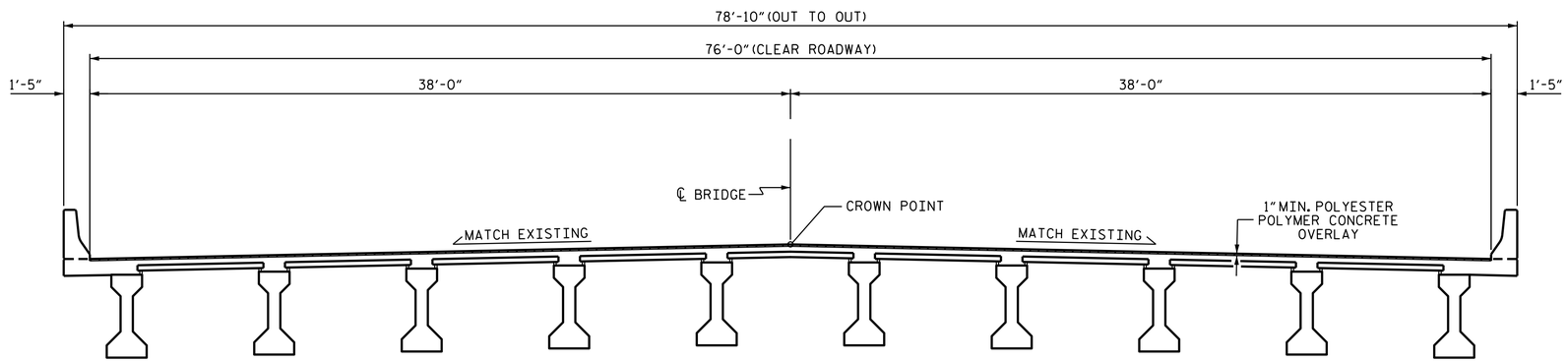

PROPOSED TYPICAL SECTION

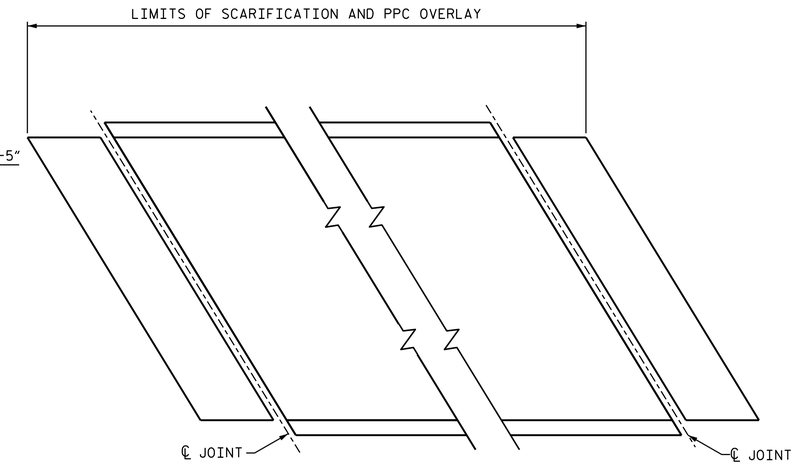

PLAN

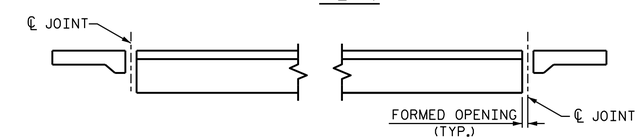

ELEVATION

PAY LIMITS FOR OVERLAY BID ITEMS

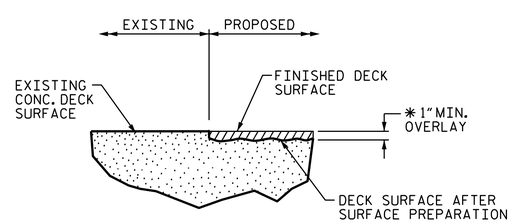

DETAIL FOR PPC OVERLAY

✱ FINISHED SURFACE ELEVATION SHALL MATCH EXISTING CONCRETE DECK SURFACE ELEVATION. ACTUAL THICKNESS OF PPC OVERLAY MAY VARY.

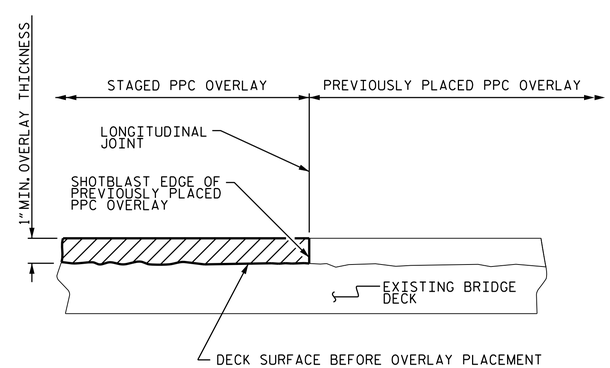

STAGED PPC OVERLAY JOINT

(AS NEEDED)

PROJECT NO. 15BPR.3

RANDOLPH COUNTY

BRIDGE NO. 191

STATE OF NORTH CAROLINA
DEPARTMENT OF TRANSPORTATION
RALEIGH

TYPICAL SECTION AND SURFACE PREPARATION DETAILS

NORTH CAROLINA PROFESSIONAL SEAL 031583 ENGINEER KRISHNA PRASAD SEDAI

DocuSigned by: Krishna P. Sedai
EA8F7941500F487
9/29/2017

DOCUMENT NOT CONSIDERED FINAL UNLESS ALL SIGNATURES COMPLETED

REVISIONS						SHEET NO.
NO.	BY:	DATE:	NO.	BY:	DATE:	S-4
1			3			TOTAL SHEETS
2			4			29

DRAWN BY : H. T. BARBOUR DATE : 6-29-17
CHECKED BY : E. K. POPE DATE : 8-9-17

29-SEP-2017 12:45
R:\Structures\750191\finalplans\Microstation\401_007_15BPR.3_SMU_ TS_04_750191.dgn
tbarbour